QUARTER-TURN ELECTRIC ACTUATORS

J4C

On-off, positioner and BSR fail-safe electric actuators

Compact multi-voltage quarter-turn electric actuators from 20 to 300 Nm, in anticorrosive polyamide housings with brushless 24 VDC motors, ISO 5211 multiflange and automatic-manual override.

- S models 24–240 VDC/VAC, B models 12 V
- 4 SPST NO micro switches (2 stop + 2 confirmation)
- Automatic 3.5 W heater, IP67
- Visual position indicator & LED status
- DPS positioner and BSR battery kits



20–300 Nm	24–240 V	IP67	75 %
OPERATING TORQUE	S MODELS	IEC 60529	DUTY RATING

Six sizes, 20 to 300 Nm.

S = 24–240 V · B = 12 V ONLY

J4C 20
S20 / B20

Torque	20 Nm
Time	9 s/90°
ISO 5211	F03/F04/F05

J4C 35
S35 / B35

Torque	35 Nm
Time	9 s/90°
ISO 5211	F03/F04/F05

J4C 55
S55 / B55

Torque	55 Nm
Time	13 s/90°
ISO 5211	F05/F07

J4C 85
S85 / B85

Torque	85 Nm
Time	29 s/90°
ISO 5211	F05/F07

J4C 140
S140 / B140

Torque	140 Nm
Time	34 s/90°
ISO 5211	F07/F10

J4C 300
S300 / B300

Torque	300 Nm
Time	58 s/90°
ISO 5211	F07/F10

SUPPLY
S models 24 to 240 VDC/VAC 50/60 Hz -0/+5 % (patent pending) · B models 12 V only

OPTIONS
DPS digital positioner · BSR battery fail-safe · potentiometer* · 3-position*

PROTECTION
IP67 (IEC 60529) · -20 °C to +70 °C

SUPPLIED & SUPPORTED IN THE UK BY
Actuation Valve & Control Ltd
actuation.co.uk

Range data.

S AND B VERSIONS IDENTICAL EXCEPT SUPPLY

Model	J4C 20	J4C 35	J4C 55	J4C 85	J4C 140	J4C 300
Operation time unload	9 s/90°	9 s/90°	13 s/90°	29 s/90°	34 s/90°	58 s/90°
Maximum torque break	25 Nm / 221 lb·in	38 Nm / 359.3 lb·in	60 Nm / 530 lb·in	90 Nm / 796.3 lb·in	170 Nm / 1504.5 lb·in	350 Nm / 3097.5 lb·in
Maximum operational torque	20 Nm / 177 lb·in	35 Nm / 309 lb·in	55 Nm / 486 lb·in	85 Nm / 752 lb·in	140 Nm / 1239 lb·in	300 Nm / 2655 lb·in
Weight	1.8 kg	1.9 kg	2.4 kg	3 kg	5.2 kg	5.2 kg
Main external shaft	Anticorrosive polyamide	Stainless steel	Stainless steel	Stainless steel	Stainless steel	Stainless steel
ISO 5211 plate	F03/F04/F05	F03/F04/F05	F05/F07	F05/F07	F07/F10 (opt. F12)	F07/F10 (opt. F12)
DIN 3337 female output	*14 mm (opt. *9 / *11)	*14 mm (opt. *9 / *11)	*17 mm (opt. *11 / *14)	*17 mm (opt. *11 / *14)	*22 mm (opt. *17)	*22 mm (opt. *17)
Conversion kit	F05 to F07 with *17 mm output	F05 to F07 with *17 mm output	–	–	–	–

Common data.

Voltage S models	24 to 240 VDC/VAC 50/60 Hz -0/+5 % (patent pending)
Voltage B models	12 V only
Duty rating	75 %
Max. working angle	0° to 270°
Limit switch	4 SPST NO micro (2 motor stop and 2 confirmations)
Automatic heater	3.5 W
Big plug	EN 175301-803 form A
Small plug	DIN 43650/C
Protection IEC 60529	IP67
Temperature	-20 °C +70 °C / -4 °F +158 °F

General characteristics.

Housing	Anticorrosive polyamide (lid & body)
External screws	Stainless steel
Gears	Steel and polyamide
Visual position indicator	Polyamide
Dome	Polycarbonate
Adjustable internal cams	Polyamide
Electric motor	24 VDC brushless motor
Insulation	Class B
Service (IEC 60034)	S4

* Digital potentiometer (1K, 5K or 10K) and 3-position actuator (0°-45°-90° or 0°-90°-180°) are listed for J4C 35 to J4C 300 in this handbook; the J4C 20 page lists DPS and BSR only.

J4C 20 SIZES

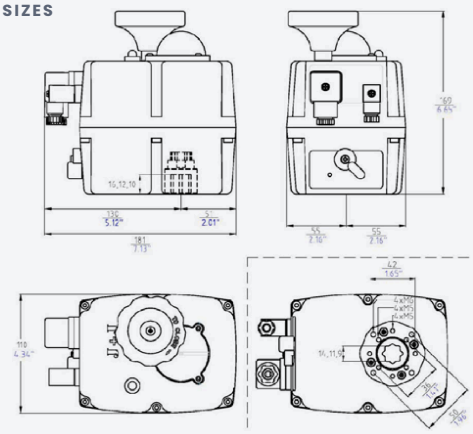

J4C 300 SIZES

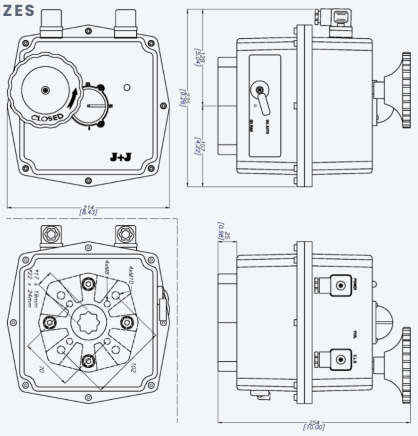

Dimension drawings for J4C 35, 55, 85 and 140 are in the J+J handbook – ask AV.

Part list.

- Manual override
- Visual control of operation (LED status)
- Power supply plug
- Automatic-manual lever
- Position indicator
- Volt-free contact plug
- ISO multiflange

DPS digital positioner.

DPS positioner	J4C 20 / 35 / 55 / 85	J4C 140 / 300
Accuracy	3 % F.S.	3 % F.S.
Linearity	2 % F.S.	2 % F.S.
Hysteresis	3 % F.S.	3 % F.S.
Steps at 4/20 mA	Min. 150 steps 90°	Min. 150 steps 90°
Steps at 0/10 V	Min. 98 steps 90°	Min. 98 steps 90°
Steps at 0/20 mA	Min. 150 steps 90°	Min. 150 steps 90°
Steps at 1/10 V	Min. 87 steps 90°	Min. 87 steps 90°
Input impedance 4/20 or 0/20 mA	100 Ohm	100 Ohm
Input impedance 0/10 or 1/10 V	25 kOhm	25 kOhm
Class	B+C to E DIN EN 15714 inching + modulation	

Signals 4-20 mA, 0-20 mA, 0-10 V or 1-10 V, NC or NO, set by DIP switches; output-only and motor-stop options set by the manufacturer or with a J4C interface. F.S. = full scale.

BSR battery fail-safe.

BSR battery kit	S/B 20	S/B 35	S/B 55	S/B 85	S/B 140	S/B 300
Operations without recharge (100 % charge)	10	10	10	10	4	4
Recharge time / operation	15 min	21 min	48 min	58 min	30 min	50 min
Battery consumption / operation	2.2 W	3.0 W	6.8 W	8.3 W	23 W	23 W
Full charge time 100 %	28 h	28 h	28 h	28 h	54 h	54 h
Nominal capacity ±5 %	2200 mA	2200 mA	2200 mA	2200 mA	2200 mA	2200 mA
NO or NC set-up	Jumper	Jumper	Jumper	Jumper	Jumper	Jumper
Current / operation with battery	10.1 mA	14 mA	31.6 mA	38.6 mA	15.1 mA	25.7 mA
Battery charge	40 mA/h	40 mA/h	40 mA/h	40 mA/h	40 mA/h	40 mA/h

NC set-up: jumper 1 on SELDIR – actuator goes to CLOSE on power failure. NO set-up: jumper 1 not on SELDIR – actuator goes to OPEN.

DPS set-up options.

BY MANUFACTURER OR J4C INTERFACE

Function	Signals
Output only	4/20 mA, 0/10 V, 0/20 mA, 1/10 V
Input & output	0/20 mA
Motor stop, without instrumentation	4/20 mA, 0/10 V, 0/20 mA, 1/10 V

Kits for existing actuators.

DPS kit

Field-fit digital positioner kits: KIT DPS J4C 20/85 and KIT DPS J4C 140/300.

BSR kit

Field-fit battery emergency fail-safe kits: KIT BSR J4C 20/85 and KIT BSR J4C 140/300.

Warranty.

J4C S/B series: up to 60,000 working cycles or 3 years from shipment date – see J+J warranty conditions.

Data supplied by J+J Automation and provided for reference only. Specifications may change without notice – please confirm details with Actuation Valve & Control before ordering.

Electric actuation from 20 to 300 Nm?

Talk to our UK team about J4C actuators, positioners, battery fail-safe kits and valve packages.

actuation.co.uk